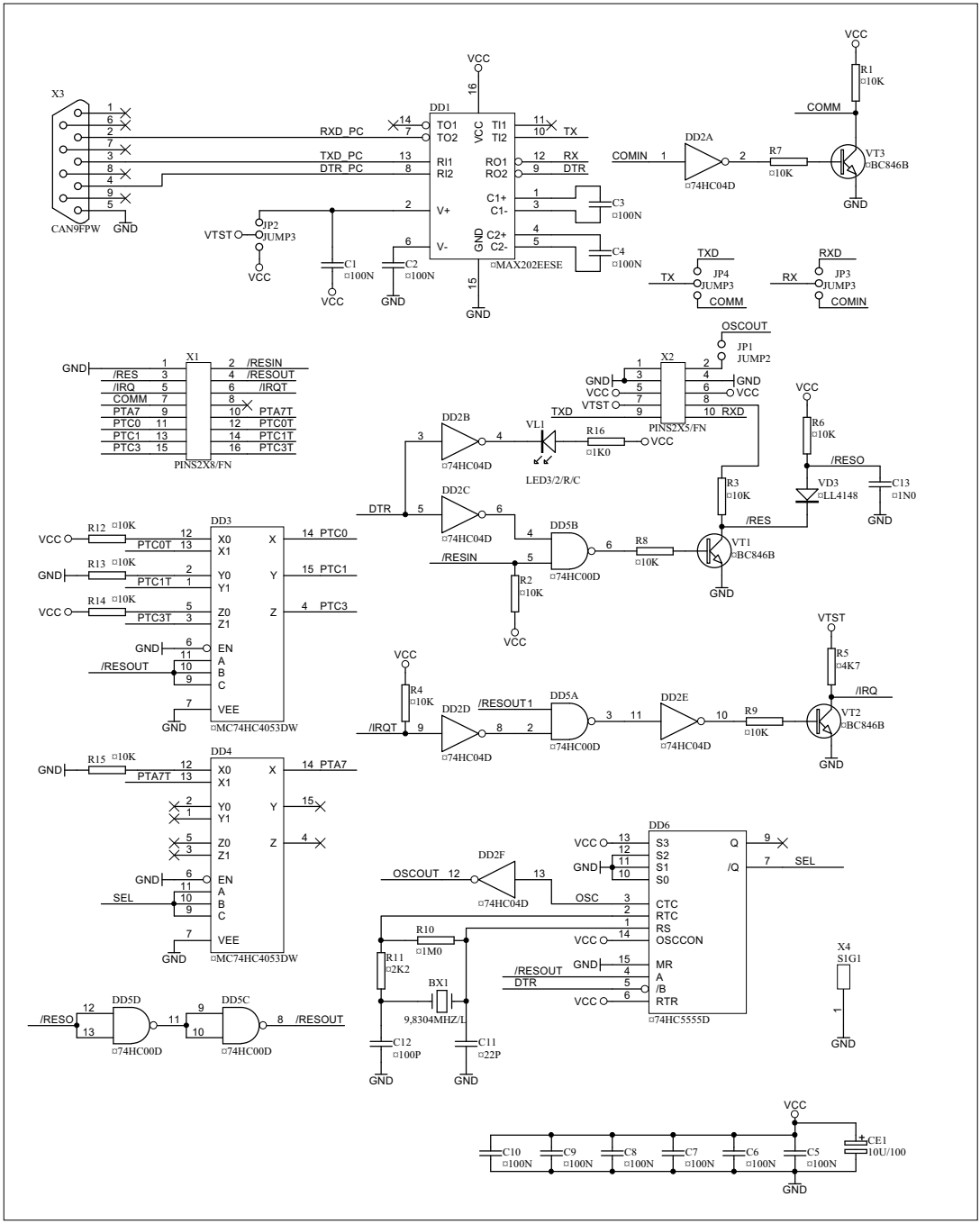
X3
CAN9FPW
GND
RXD_PC
TXD_PC
DTR_PC
DD1
TO1
TO2
RI1
RI2
VCC
V+
V-
GND
TI1
TI2
RO1
RO2
C1+
C1-
C2+
C2-
TX
RX
DTR
MAX202EESE
JP2
JUMP3
VTST
C1
100N
C2
100N
C3
100N
C4
100N
COMIN
DD2A
74HC04D
R7
10K
R1
10K
COMM
VT3
BC846B
TXD
JP4
JUMP3
RXD
JP3
JUMP3
X1
PINS2X8/FN
/RES
/IRQ
COMM
PTA7
PTC0
PTC1
PTC3
/RESIN
/RESOUT
/IRQT
PTA7T
PTC0T
PTC1T
PTC3T
OSCOUT
JP1
JUMP2
X2
PINS2X5/FN
DD2B
VL1
LED3/2/R/C
R16
1K0
DD2C
DD5B
74HC00D
R8
10K
R2
10K
R3
10K
R6
10K
VD3
LL4148
C13
1N0
VT1
BC846B
DD3
MC74HC4053DW
R12
10K
R13
10K
R14
10K
PTC0
PTC1
PTC3
EN
VEE
R4
10K
DD2D
DD5A
DD2E
R9
10K
R5
4K7
VT2
BC846B
DD4
R15
10K
PTA7
SEL
DD2F
DD6
74HC5555D
S3
S2
S1
S0
CTC
RTC
RS
OSCCON
MR
A
/B
RTR
Q
/Q
OSC
R10
1M0
R11
2K2
BX1
9,8304MHZ/L
C12
100P
C11
22P
X4
S1G1
DD5D
DD5C
/RESO
C10
100N
C9
100N
C8
100N
C7
100N
C6
100N
C5
100N
CE1
10U/100